WARNING! SYSTEM DOES NOT FIT ON Z1000SX WITH SIDE CASES!

KAWASAKI Z 1000 , Complete exhaust system / RACING LINE
KAWASAKI Z 1000 SX, Complete exhaust system / RACING LINE
Product code: S-K10R6-ZC
S-K10R6-ZT

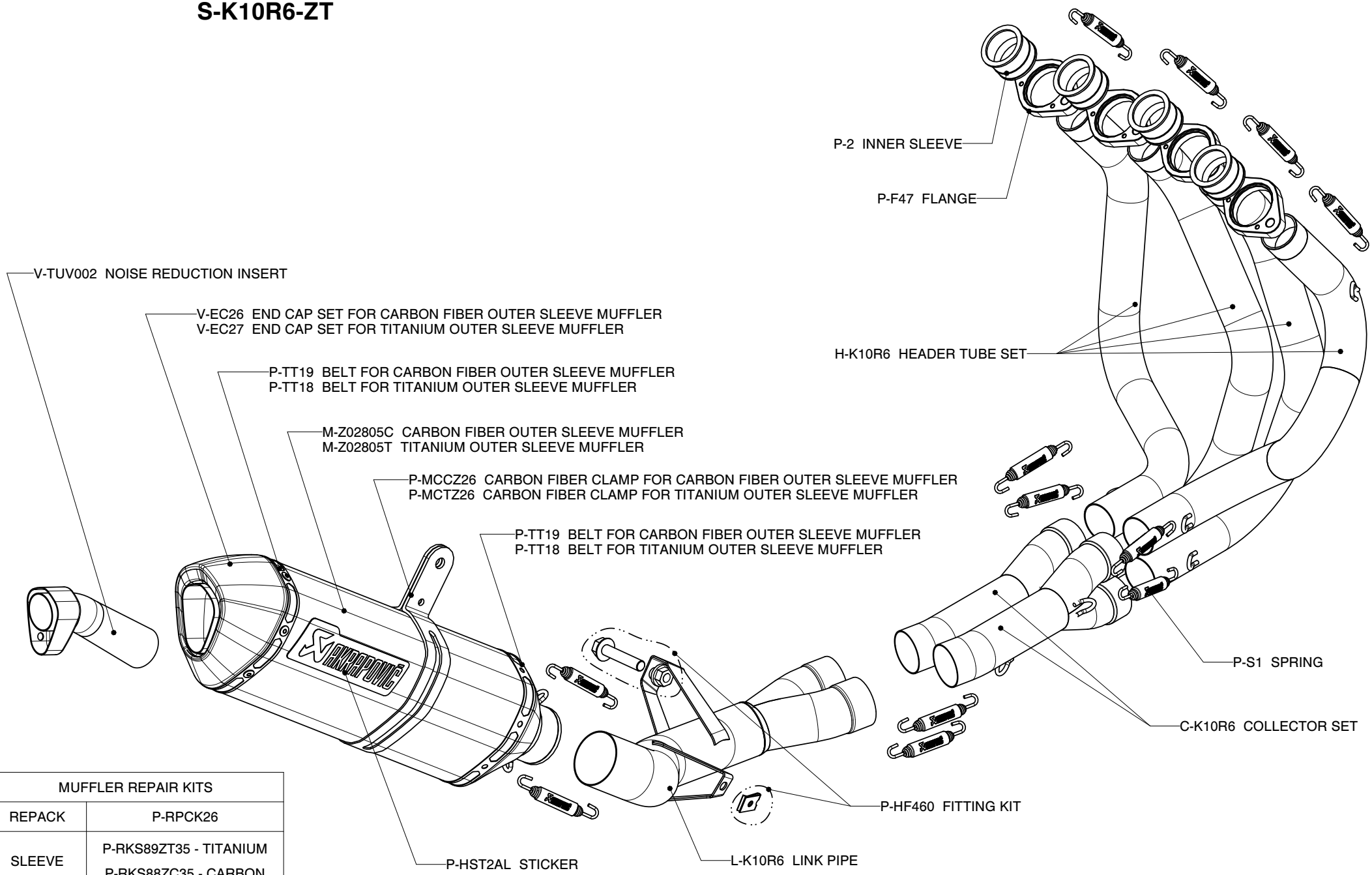

MUFFLER REPAIR KITS	
REPACK	P-RPCK26
SLEEVE	P-RKS89ZT35 - TITANIUM P-RKS88ZC35 - CARBON