YAMAHA YZ 450F/ Complete exhaust system/Evolution line

Product code: S-Y4MET11-QT

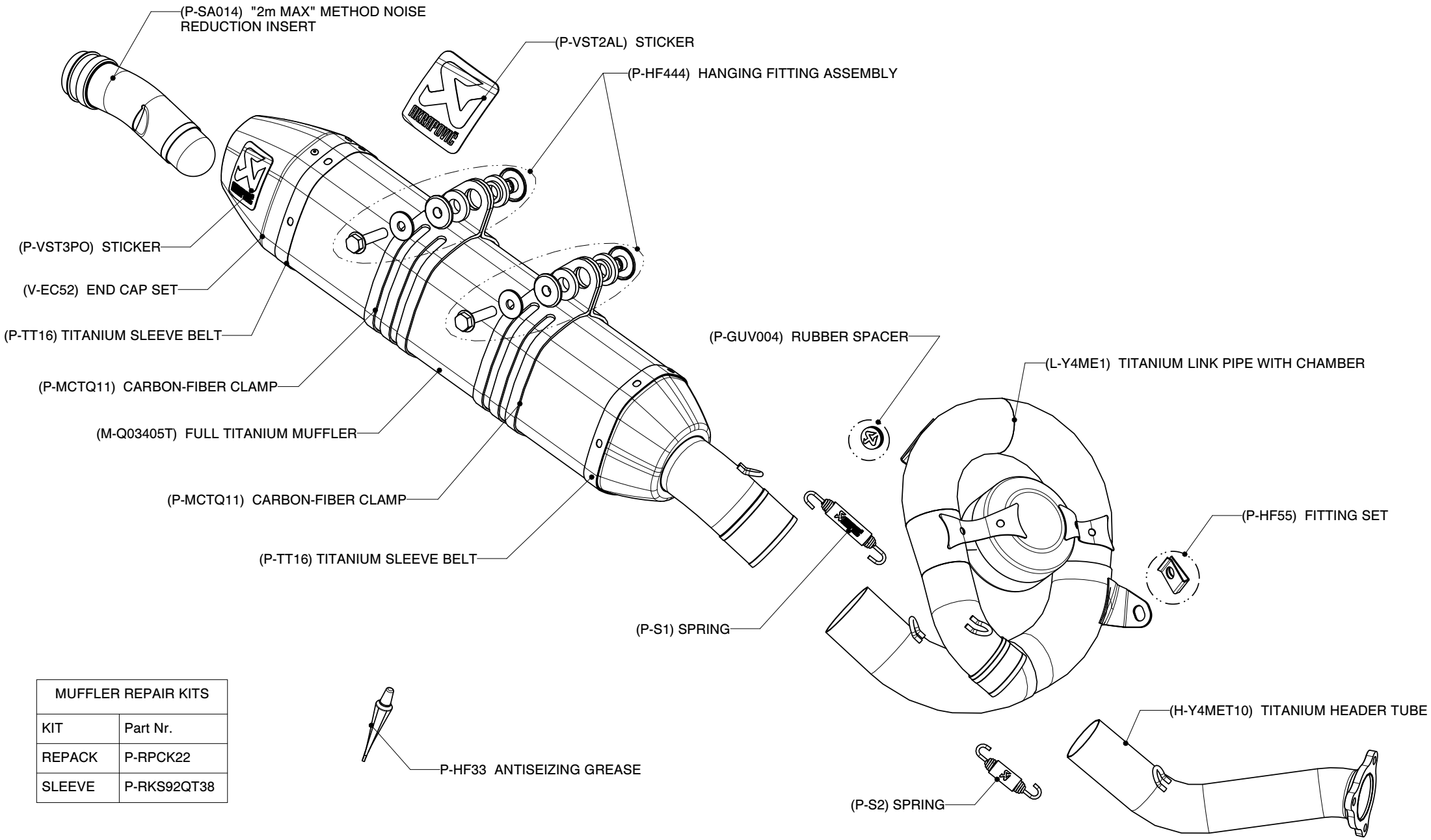

MUFFLER REPAIR KITS	
KIT	Part Nr.
REPACK	P-RPCK22
SLEEVE	P-RKS92QT38